Technical Data

PST ZP75A(B)

RECTIFIER DIODE

Features

- Blocking Capability up to 1600 V
- High Surge Rating
- Stud Cathode and Stud Anode Version

ELECTRICAL CHARACTERISTICS AND RATINGS

Blocking

Parameter	Symbol	Min	Max	Typ	Unit	Conditions
Repetitive peak reverse voltage	V_{RRM}		1600		V	Tj = -40 °C to 180 °C
Non repetitive peak reverse voltage	V_{RSM}		1700		V	Tj = -40 °C to 180 °C
Repetitive peak reverse current	I_{RRM}		10		mA	Tj = Tjmax , V = V_{RRM}

Conducting

Parameter	Symbol	Min	Max	Typ	Unit	Conditions
Average value of forward current	$I_{F(AV)}$		95		A	50 Hz sinewave,180° conduction, Tc = 100 °C
RMS value of forward current	$I_{F(RMS)}$		150		A	50 Hz sinewave,180° conduction, Tc = 35 °C
Peak one cycle surge (non repetitive) current	I_{FSM}		1		kA	50 Hz sinewave,180° conduction, Tj = Tjmax, V_R = 0
I square t	I^2t		5.0		kA^2s	Tj = Tjmax
Peak forward voltage	V_{FM}		1.45		V	Forward current 200 A, Tj= Tjmax
Threshold voltage	$V_{F(TO)}$		0.85		V	Tj = Tjmax
Forward slope resistance	r_F		3.0		mΩ	Tj = Tjmax

Thermal and mechanical characteristics and ratings

Parameter	Symbol	Min	Max	Typ	Unit	Conditions
Operating temperature	T_j	-40	180		°C	
Storage temperature	T_{stg}	-40	180		°C	
Thermal resistance junction to case	$R_{th(j-c)}$		0.55		°C/W	180° SIN
Thermal resistance case to sink	$R_{th(c-s)}$		0.20		°C/W	Mounting surfaces smooth, flat and greased
Mounting torque	M		4		N·m	
Weight	W			30	g	

PST ZP75A(B)

RECTIFIER DIODE

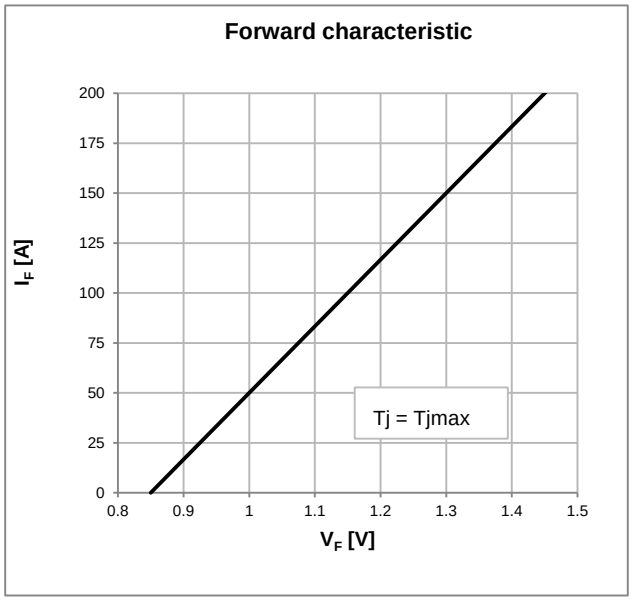

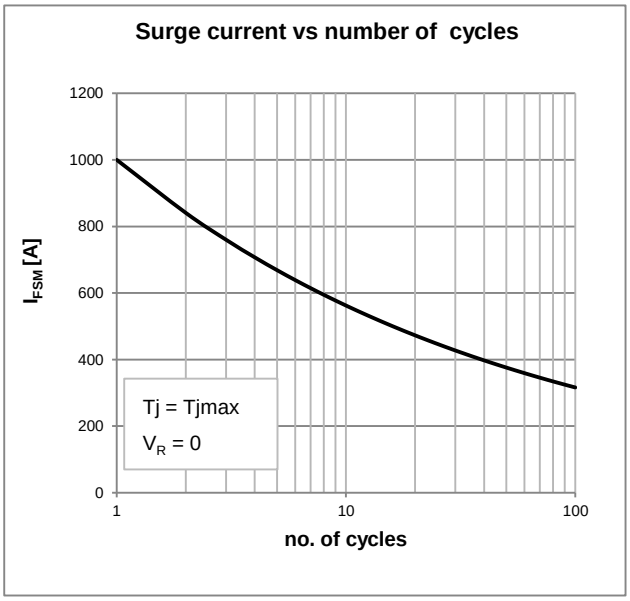

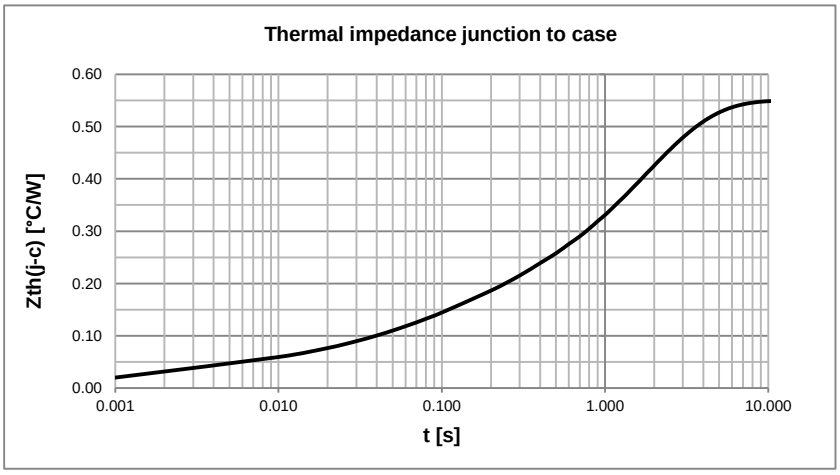

PST ZP75A(B)

RECTIFIER DIODE

OUTLINE AND DIMENSIONS

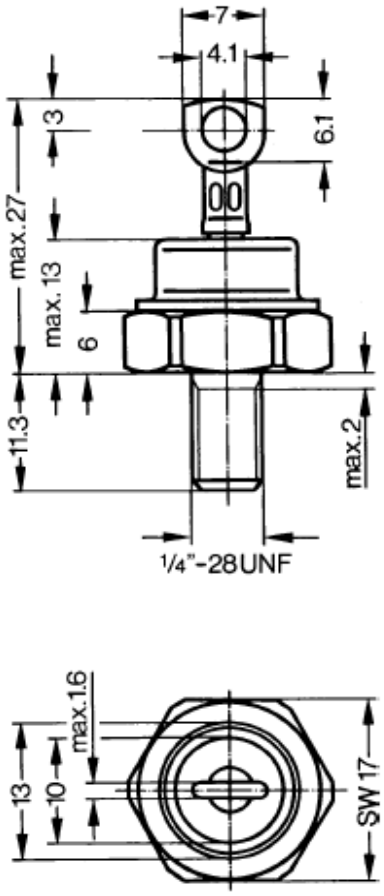

dimensions in mm

ZP75A	
ZP75B