PROTON-ELECTROTEX
POWER SEMICONDUCTOR DEVICES

PressPack IGBT Module

Available for orders in Q3-Q4 2018

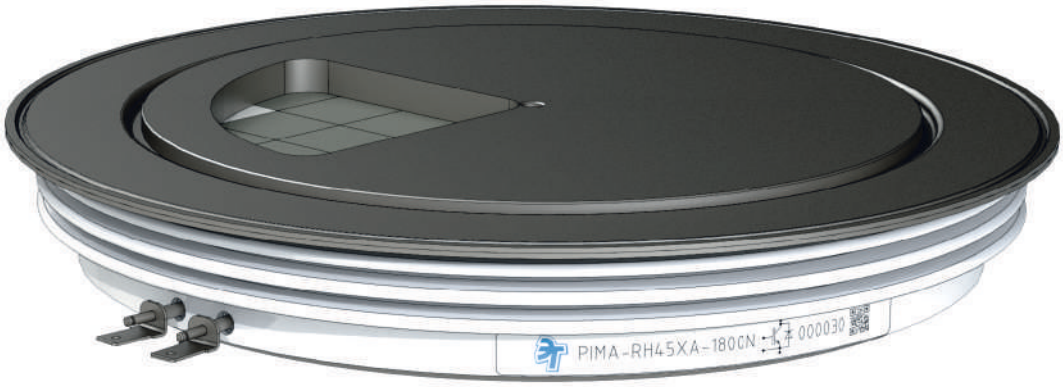

DESIGN FEATURES:

- High power cycling performance due to pressure contact of active elements
- Stable short-circuit state in malfunction mode
- Can be used in serial connection
- Wide range of operation temperatures from -60 to +125 °C
- Hermetically sealed housing enables operation in explosion hazardous and aggressive environments

TYPICAL APPLICATIONS:

Energy grids

- Flexible AC transmission systems *(FACTS)*:
  - *static synchronized compensators (STATCOM)*
  - *static VAR compensators (SVC)*
- High-voltage direct current lines *(HVDC)*
- Renewable energy *(wind and solar power generation)*

Electric drives

- Transportation *(railroad transport, ship electric drives, electric drives for mining and transport machines)*
- Industrial equipment

PROPERTIES:

Product	V_{ces}, V	I_C, A	$V_{CE\,(SAT)}$, V ($I_c = I_{C\_NOM}$)	V_F, V ($I_c = I_{C\_NOM}$)	T_J, °C	Circuit configuration	Dimensions
PIMA-RH45XA-1800N	4500	1800	3,7	3,9	125	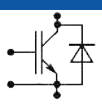	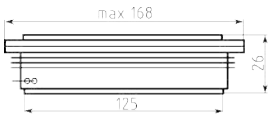
PIMA-AS45XA-2000N	4500	2000	3,6	-	125		

www.proton-electrotex.com +7 (4862) 44-04-56 marketing@proton-electrotex.com

PROTON-ELECTROTEX
POWER SEMICONDUCTOR DEVICES

Full-SiC MODULE MCDA

1200V 500A low inductance H-Bridge /Phase-leg module in standard footprint

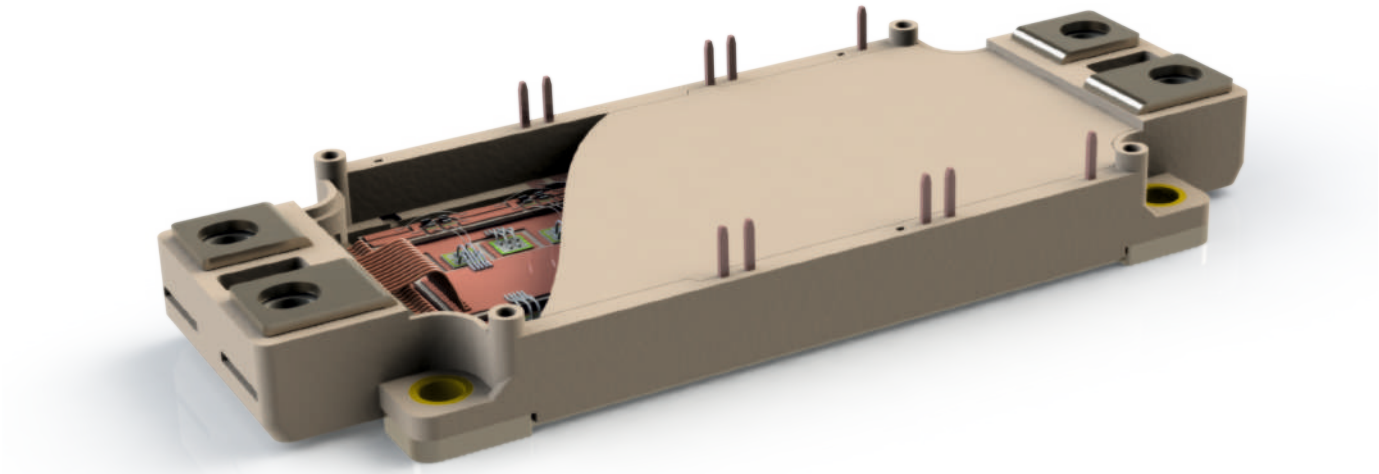

MODULE FEATURES:

- Full-SiC module with latest generation SiC MOSFET and SiC SBD
- Very low stray inductance (<8nH) in standard footprint
- Switching cell topology
- H-Bridge (250A) or Phase leg (500A)
- Low R_{DS}(on) (<3.5 mOhm)
- Optimized gate-source circuit
- AlN substrate
- AlSiC baseplate
- Low die thermal coupling

MODULE ADVANTAGES:

- Standard footprint
- Low conduction and ultra-low switching losses
- Fast and clean switching with minimum voltage overshoot and ringing
- Excellent die current sharing
- High thermal performance
- High thermal cycling performance

SYSTEM BENEFITS:

- High frequency operation
- Design flexibility and small size
- System cost reduction

OPERATING FREQUENCY VS CURRENT

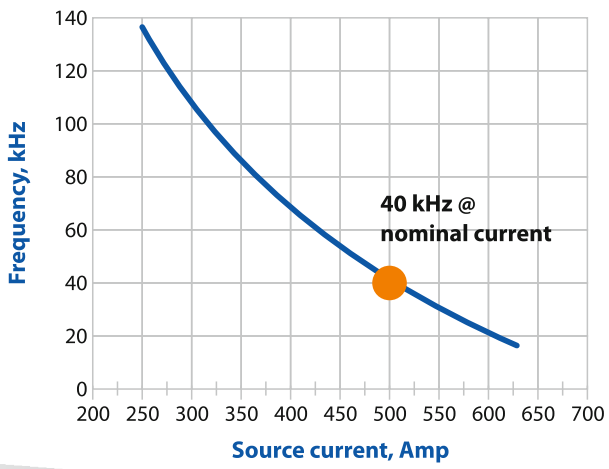

SWITCHING CELL H-BRIDGE TOPOLOGY

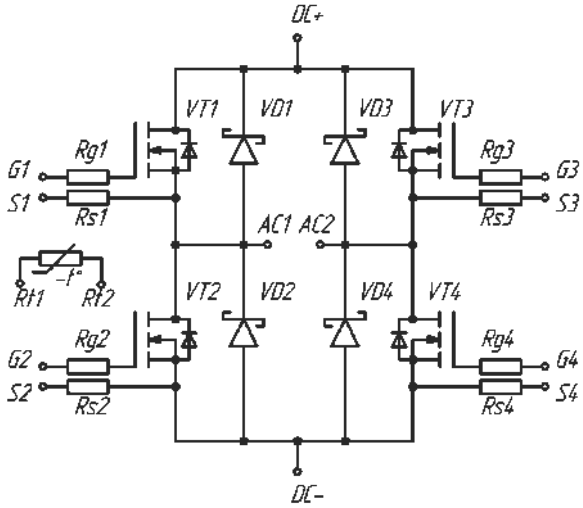

www.proton-electrotex.com +7 (4862) 44-04-56 marketing@proton-electrotex.com